NAKAYAMA PRO

Model PM5530 Art# 084105

Fig 1/2

NIKOLAOU TOOLS

version 1
2025/09

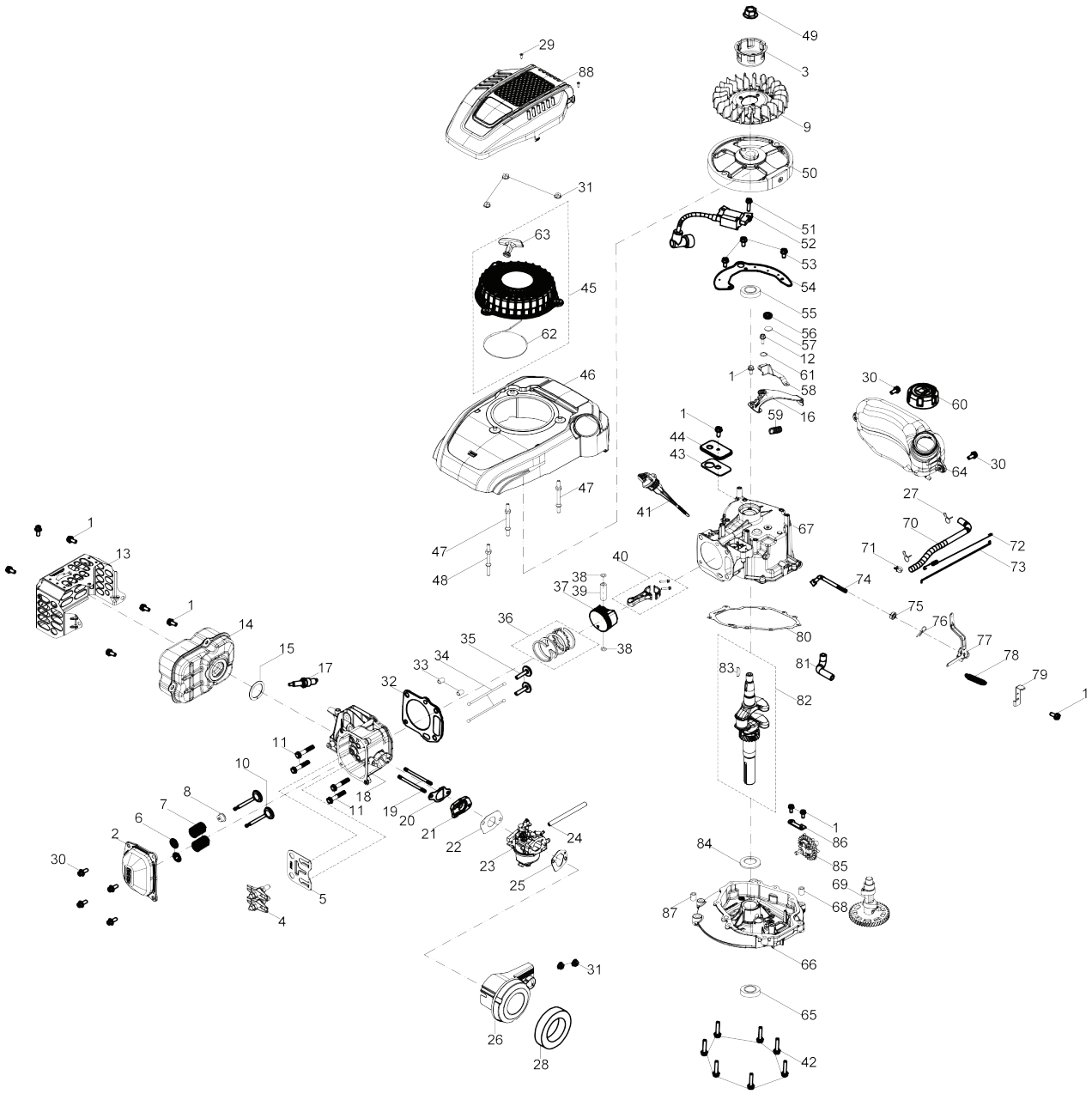

NAKAYAMA PRO

Model PM5530 Art# 084105

Fig 2/2

NIKOLAOU TOOLS
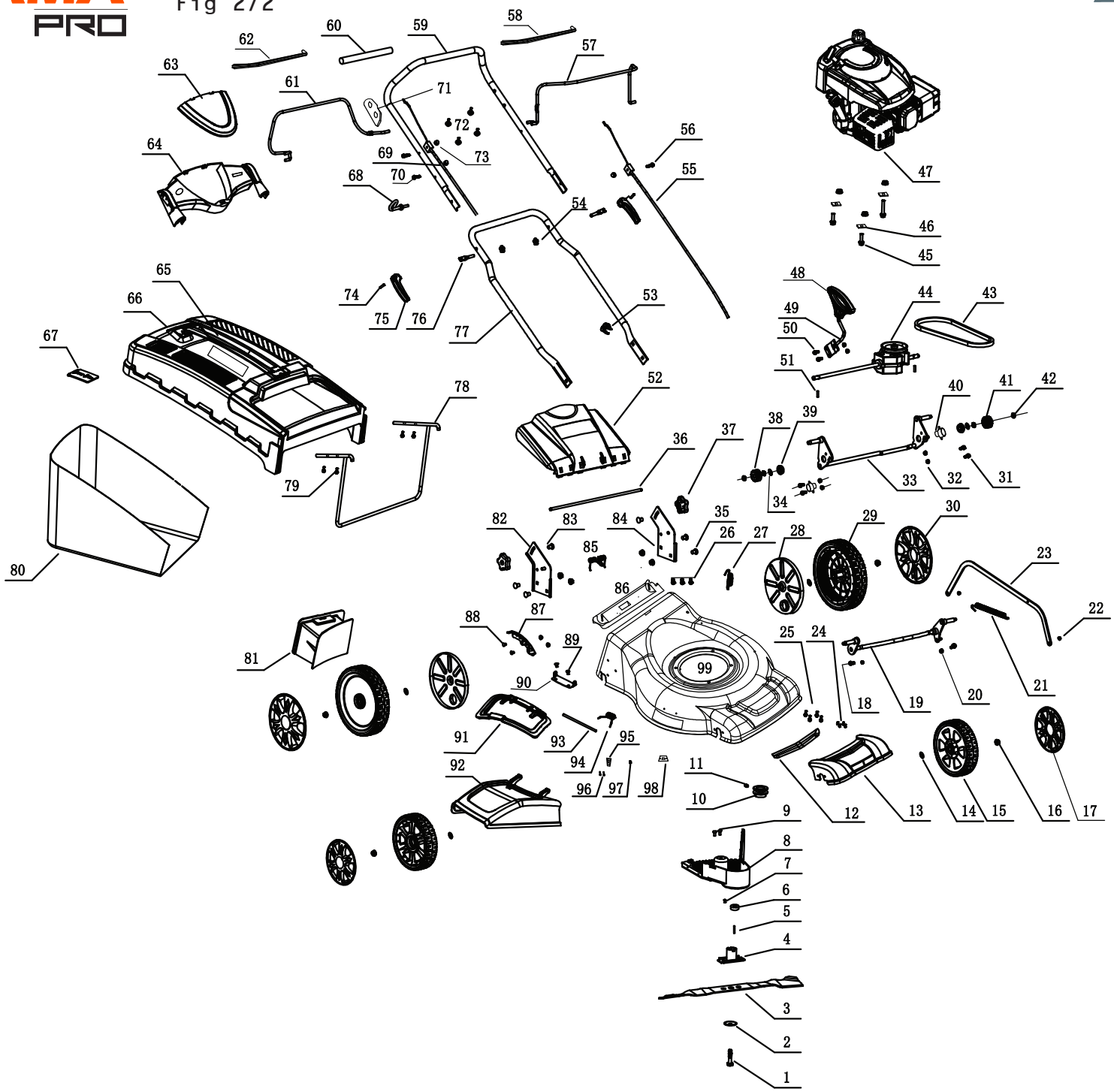
version 1
2025/09