BORMANN PRO
Built to last.

Model BCP3850 Art# 070535
Fig 1/1

NIKOLAOU TOOLS
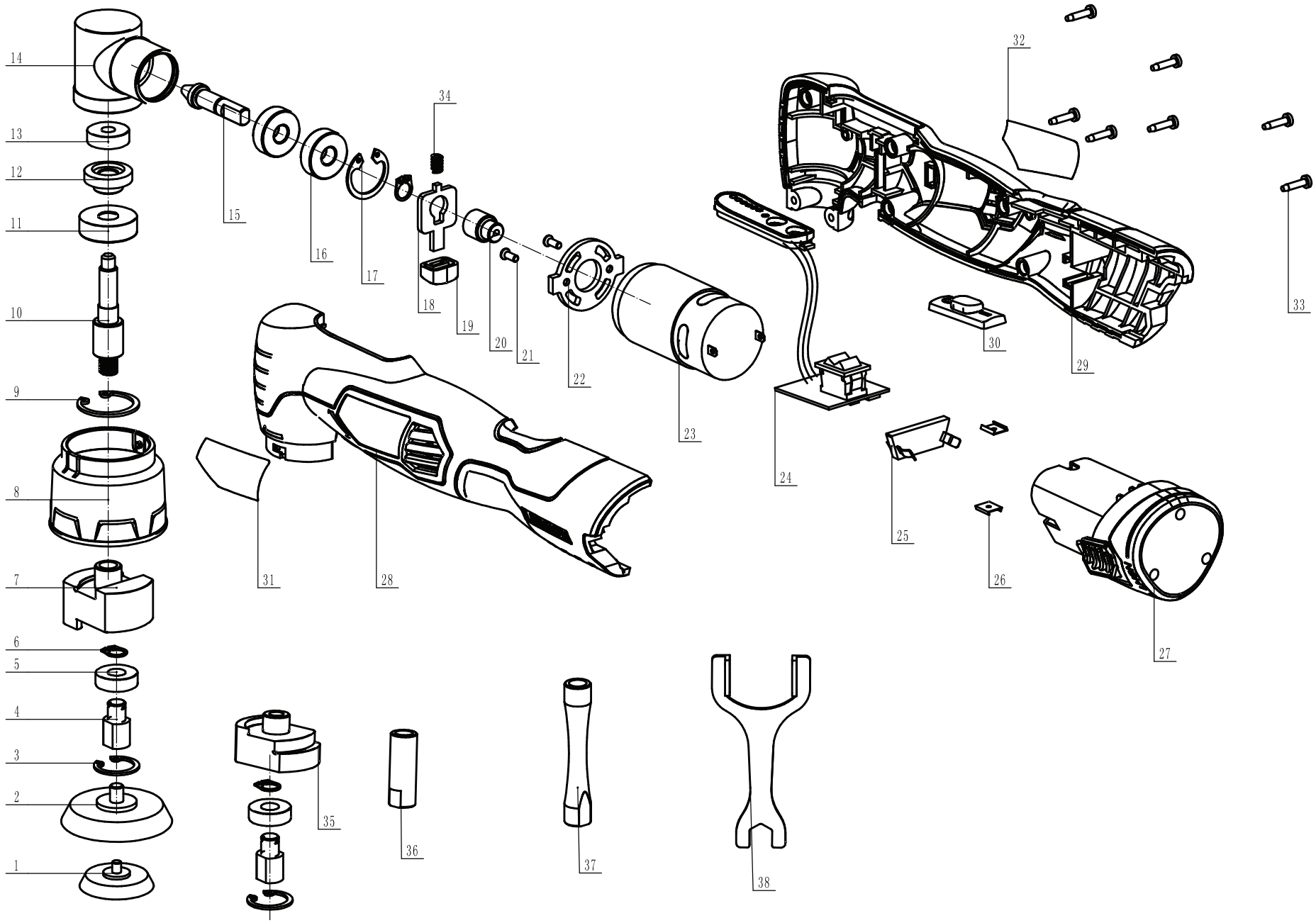
version 1
2026/03