BORMANN PRO
Built to last.

Model BBP4202 Art# 083290
Fig 1/1

NIKOLAOU TOOLS
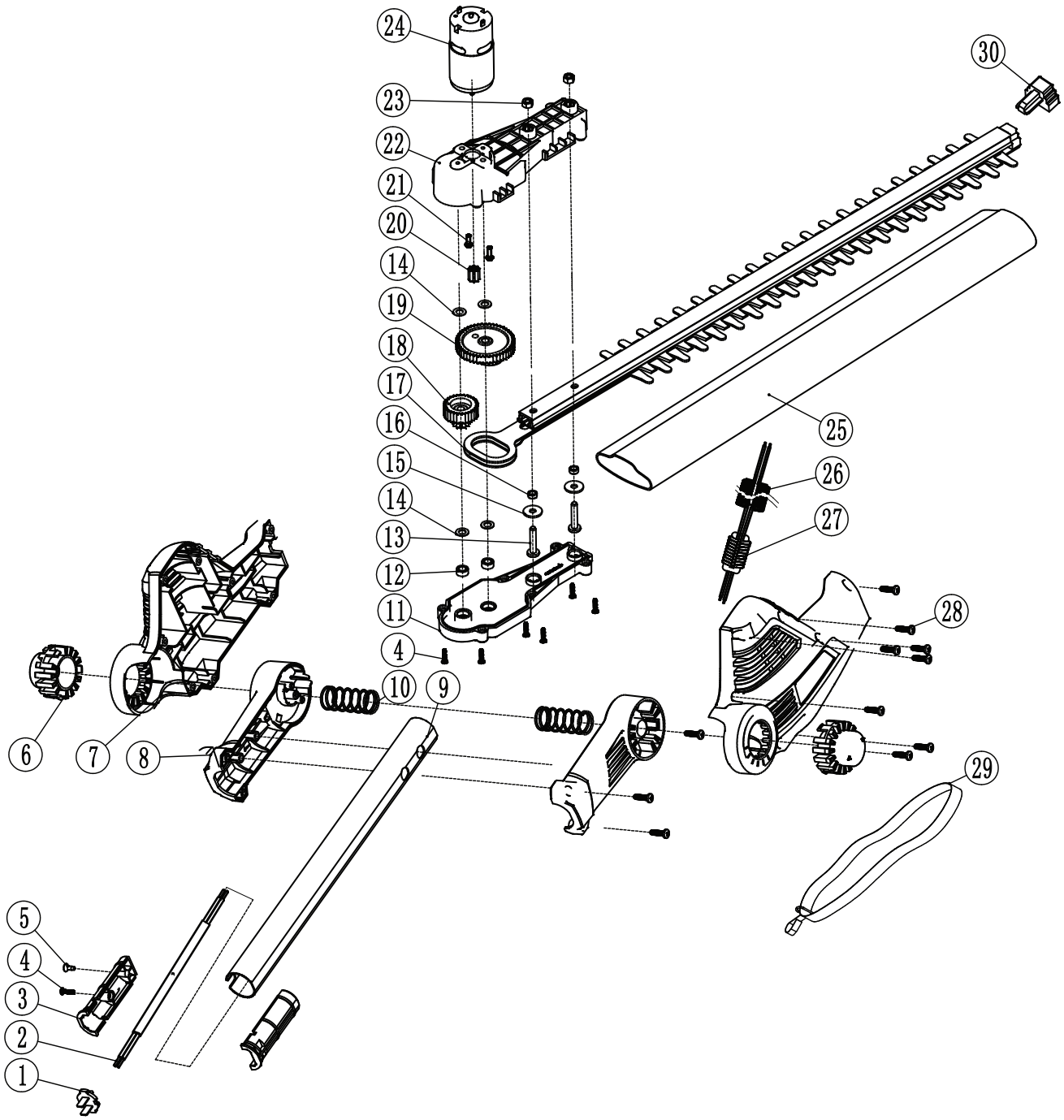
version 1
2025/07